Basic Equations of Fluid Flow

By
Farhan Ahmad
farhanahmad@uet.edu.pk

Department of Chemical Engineering,
University of Engineering & Technology Lahore

- ***Mass Balance***
- ***Momentum Balance***
- ***Mechanical Energy Balance***

Basic Concepts

- **Conserved Quantities**
  - **Chemical species**
  - **Mass**
  - **Momentum**
  - **Energy**
- **Law of Conservation of Quantities**
  - **Conservation of Chemical species**
  - **Conservation of Mass**
  - **Conservation of Momentum**
  - **Conservation of Energy**

Basic Concepts

- **Rate Equation**
  - **It describes the transformation of conserved quantity.**
  - **Transformation of conserved quantity is based on specified unit of time (Rate).**

- **Components of Rate Equation**
  - **Input**
  - **Output**
  - **Generation**
  - **Consumption**
  - **Accumulation**

Basic Concepts - Characteristics

- **Independent of the level of application**
- **Independent of the coordinate system to which they are applied**
- **Independent of the substance to which they are applied**

Basic Concepts - Application

- **Balances**
  - **Control Volume**
  - **Control surface**

- **Types of Balances**
  - **Overall Balance**
  - **Differential Balance**

Basic Concepts - Definition

The notation of conserved quantity is φ

$$\varphi = \varphi(t, x, y, z)$$

x, y & z = three independent space variables

t = one independent time variable

Basic Concepts - Definition

- ✓ **Steady-state**
- ✓ **Uniform**
- ✓ **Equilibrium**
- ✓ **Flux**

Basic Concepts – Mathematical Equation

1. **Inlet and Outlet terms**
2. **Generation and consumption term**
3. **Accumulation term**

Basic Concepts – Simplification of Rate Equation

Case I : Steady state transport without regeneration

Case II : Steady state transport with regeneration

Equation of Continuity

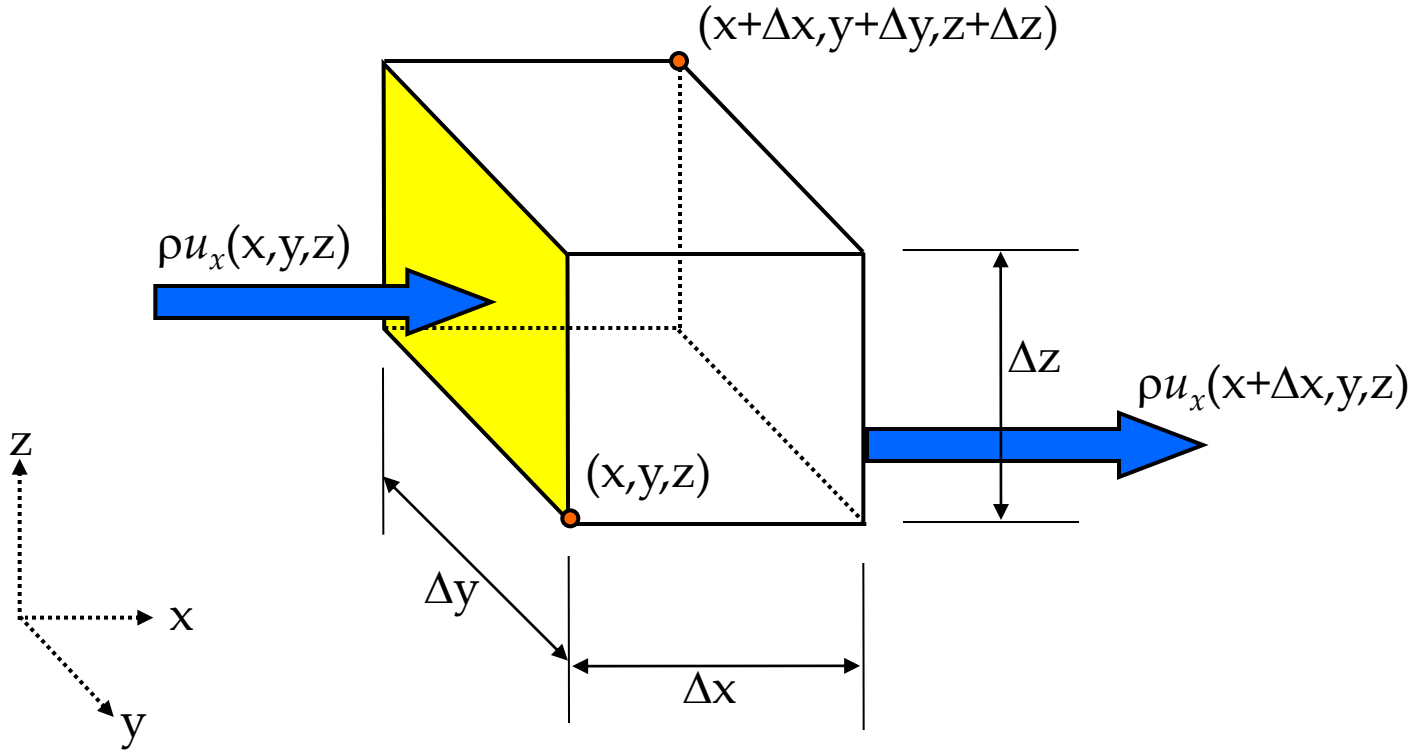

Volume element ΔxΔyΔz

Apply Law Of Conservation Of Mass On This Small Volume Element

Concepts

Streamline **– An imaginary curve in a mass of flowing fluids where at every point on the curve the net-velocity vector is tangent.**

- **No net flow across streamline**

Stream tube **– tube of small and large cross section that is entirely bounded by streamlines**

- **Like imaginary pipe in flowing fluid**
- **No net flow across the surface**

Stream tube

A Stream tube, or stream filament, is a tube of small or large cross section and of any convenient cross-sectional shape that is entirely bounded by streamlines.

A stream tube can be visualized as an imaginary pipe in the mass of flowing fluid.

$$\dot{m} = \rho_a u_a S_a = \rho_b u_b S_b$$

$$\dot{m} = \rho u S = \text{const}$$

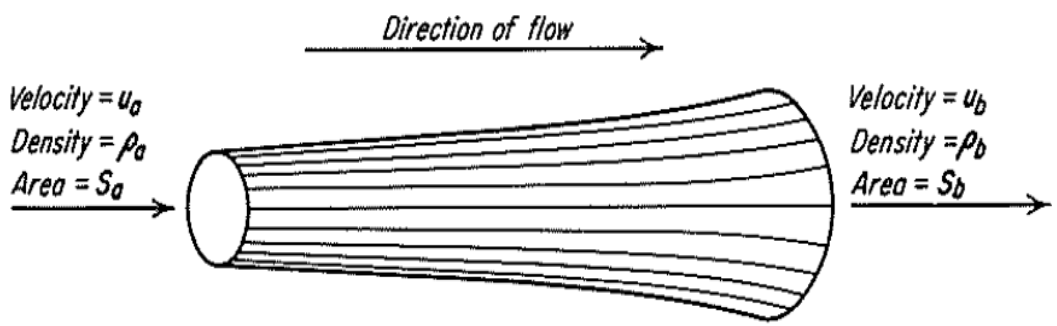

Average Velocity

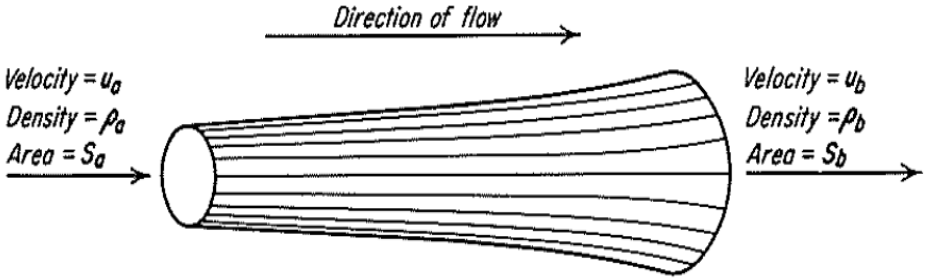

The average velocity of the entire stream flow through cross-sectional area S :

$$\bar{V} \equiv \frac{\dot{m}}{\rho S} = \frac{1}{S}\int_S u\, dS$$

$$\bar{V} = \frac{q}{S}$$

Case: flow through circular cross-section

$$\frac{\rho_a \bar{V}_a}{\rho_b \bar{V}_b} = \left(\frac{D_b}{D_a}\right)^2$$

Mass Velocity

$$\bar{V}\rho = \frac{\dot{m}}{S} \equiv G$$

- **G is independent of temperature and pressure when the flow is steady and the cross section is unchanged.**
- **Significant for compressible fluids.**
- **Mass velocity – Mass current density or Mass flux**
- **Average velocity – Volume flux**

Example 4.1

Example 4.1. Crude oil, specific gravity 60°F/60°F = 0.887, flows through the piping shown in Fig. 4.2. Pipe *A* is 2-in. (50-mm) Schedule 40, pipe *B* is 3-in. (75-mm) Schedule 40, and each of pipes *C* is $1\frac{1}{2}$-in. (38-mm) Schedule 40. An equal quantity of liquid flows through each of the pipes *C*. The flow through pipe *A* is 30 gal/min (6.65 m^3/h). Calculate (*a*) the mass flow rate in each pipe, (*b*) the average linear velocity in each pipe, and (*c*) the mass velocity in each pipe.

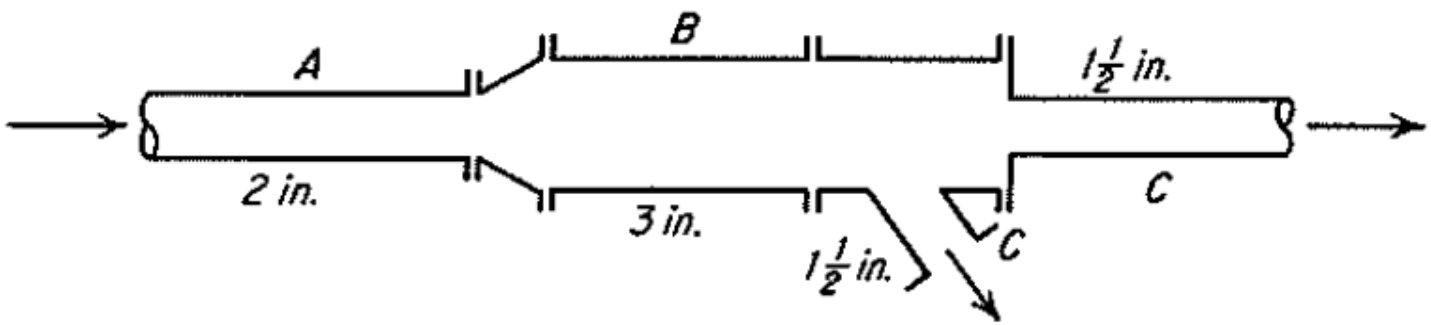

Nominal pipe size, in.	Outside diameter, in.	Schedule no.	Wall thickness, in.	Inside diameter, in.	Cross-sectional area of metal, in.^{2}	Inside sectional area, ft^2	Circumference, ft or surface, ft^2/ft of length		Capacity at 1 ft/s velocity		Pipe weight lb/ft
							Outside	Inside	U.S. gal/min	Water, lb/h	
$\frac{1}{8}$	0.405	40	0.068	0.269	0.072	0.00040	0.106	0.0705	0.179	89.5	0.24
		80	0.095	0.215	0.093	0.00025	0.106	0.0563	0.113	56.5	0.31
$\frac{1}{4}$	0.540	40	0.088	0.364	0.125	0.00072	0.141	0.095	0.323	161.5	0.42
		80	0.119	0.302	0.157	0.00050	0.141	0.079	0.224	112.0	0.54
$\frac{3}{8}$	0.675	40	0.091	0.493	0.167	0.00133	0.177	0.129	0.596	298.0	0.57
		80	0.126	0.423	0.217	0.00098	0.177	0.111	0.440	220.0	0.74
$\frac{1}{2}$	0.840	40	0.109	0.622	0.250	0.00211	0.220	0.163	0.945	472.0	0.85
		80	0.147	0.546	0.320	0.00163	0.220	0.143	0.730	365.0	1.09
$\frac{3}{4}$	1.050	40	0.113	0.824	0.333	0.00371	0.275	0.216	1.665	832.5	1.13
		80	0.154	0.742	0.433	0.00300	0.275	0.194	1.345	672.5	1.47
1	1.315	40	0.133	1.049	0.494	0.00600	0.344	0.275	2.690	1,345	1.68
		80	0.179	0.957	0.639	0.00499	0.344	0.250	2.240	1,120	2.17
$1\frac{1}{4}$	1.660	40	0.140	1.380	0.668	0.01040	0.435	0.361	4.57	2,285	2.27
		80	0.191	1.278	0.881	0.00891	0.435	0.335	3.99	1,995	3.00
$1\frac{1}{2}$	1.900	40	0.145	1.610	0.800	0.01414	0.497	0.421	6.34	3,170	2.72
		80	0.200	1.500	1.069	0.01225	0.497	0.393	5.49	2,745	3.63

(Continued)

Nominal pipe size, in.	Outside diameter, in.	Schedule no.	Wall thickness, in.	Inside diameter, in.	Cross-sectional area of metal, in.^{2}	Inside sectional area, ft^2	Circumference, ft or surface, ft^2/ft of length		Capacity at 1 ft/s velocity		Pipe weight lb/ft
							Outside	Inside	U.S. gal/min	Water, lb/h	
2	2.375	40	0.154	2.067	1.075	0.02330	0.622	0.541	10.45	5,225	3.65
		80	0.218	1.939	1.477	0.02050	0.622	0.508	9.20	4,600	5.02
2½	2.875	40	0.203	2,469	1.704	0.03322	0.753	0.647	14.92	7,460	5.79
		80	0.276	2.323	2.254	0.02942	0.753	0.608	13.20	6,600	7.66
3	3.500	40	0.216	3.068	2.228	0.05130	0.916	0.803	23.00	11,500	7.58
		80	0.300	2.900	3.016	0.04587	0.916	0.759	20.55	10,275	10.25
3½	4.000	40	0.226	3.548	2.680	0.06870	1.047	0.929	30.80	15,400	9.11
		80	0.318	3.364	3.678	0.06170	1.047	0.881	27.70	13,850	12.51
4	4.500	40	0.237	4.026	3.17	0.08840	1.178	1.054	39.6	19,800	10.79
		80	0.337	3.826	4.41	0.07986	1.178	1.002	35.8	17,900	14.98
5	5.563	40	0.258	5.047	4.30	0.1390	1.456	1.321	62.3	31,150	14.62
		80	0.375	4.813	6.11	0.1263	1.456	1.260	57.7	28,850	20.78
6	6.625	40	0.280	6.065	5.58	0.2006	1.734	1.588	90.0	45,000	18.97
		80	0.432	5.761	8.40	0.1810	1.734	1.508	81.1	40,550	28.57
8	8.625	40	0.322	7.981	8.396	0.3474	2.258	2.089	155.7	77,850	28.55
		80	0.500	7.625	12.76	0.3171	2.258	1.996	142.3	71,150	43.39
10	10.75	40	0.365	10.020	11.91	0.5475	2.814	2.620	246.0	123,000	40.48
		80	0.594	9.562	18.95	0.4987	2.814	2.503	223.4	111,700	64.40
12	12.75	40	0.406	11.938	15.74	0.7773	3.338	3.13	349.0	174,500	53.56
		80	0.688	11.374	26.07	0.7056	3.338	2.98	316.7	158,350	88.57

Example 4.2

- Air at 20 C and 2 atm absolute pressure enters a finned-tube steam heater through a 50-mm tube at an average velocity of 15 m/s. It leaves the heater through a 65-mm tube at 90 C and 1.6 atm absolute. What is the average air velocity at the outlet?

Macroscopic Momentum Balance

"The sum of forces acting in the x direction equals the difference between the momentum leaving with the fluid per unit time and that brought in per unit time by the fluid."

$$\sum F = \frac{1}{g_c}(\dot{M}_b - \dot{M}_a)$$

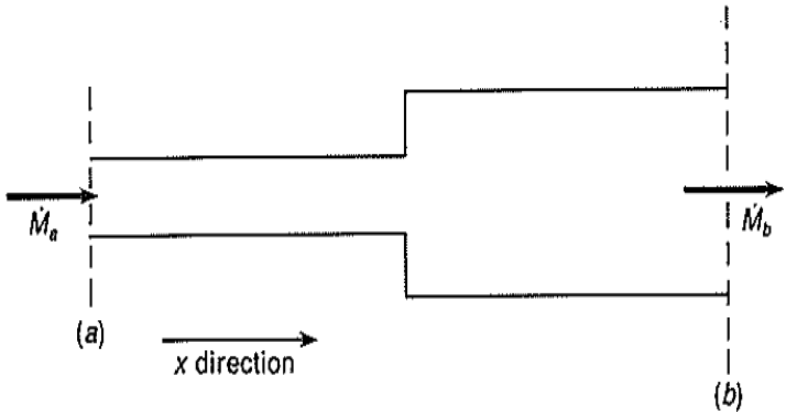

Momentum Correction Factor

Total momentum flow is not equal to what calculated by product of mass flow rate and average velocity

Correction factor is introduced

From convective momentum flux, for differential cross-section *dS*

$$\frac{d\dot{M}}{dS} = (\rho u)u = \rho u^2$$

For whole stream

$$\frac{\dot{M}}{S} = \frac{\rho \int_S u^2 \, dS}{S}$$

Momentum Correction Factor

Momentum correction factor is defined as

$$\beta \equiv \frac{\dot{M}/S}{\rho \bar{V}^2}$$

By substitution

$$\beta = \frac{1}{S}\int_S \left(\frac{u}{\bar{V}}\right)^2 dS$$

Momentum of Total Stream

$$\sum F = \frac{\dot{m}}{g_c}(\beta_b \bar{V}_b - \beta_a \bar{V}_a)$$

Note: All forces components acting on the fluid is in the direction of velocity component.

Forces:

- **Pressure forces**
- **Shear stress at the boundary**
- **Gravitational force**

$$\sum F = p_a S_a - p_b S_b + F_w - F_g$$

Momentum Balance in Potential Flow: The Bernoulli Equation without Friction

- **Steady flow**
- **Potential flow**
- **Frictional effects are not considered**
- **Increasing cross-section**
- **Direction of flow from a to b**
- **Constant mass flow rate $\dot{m}$**

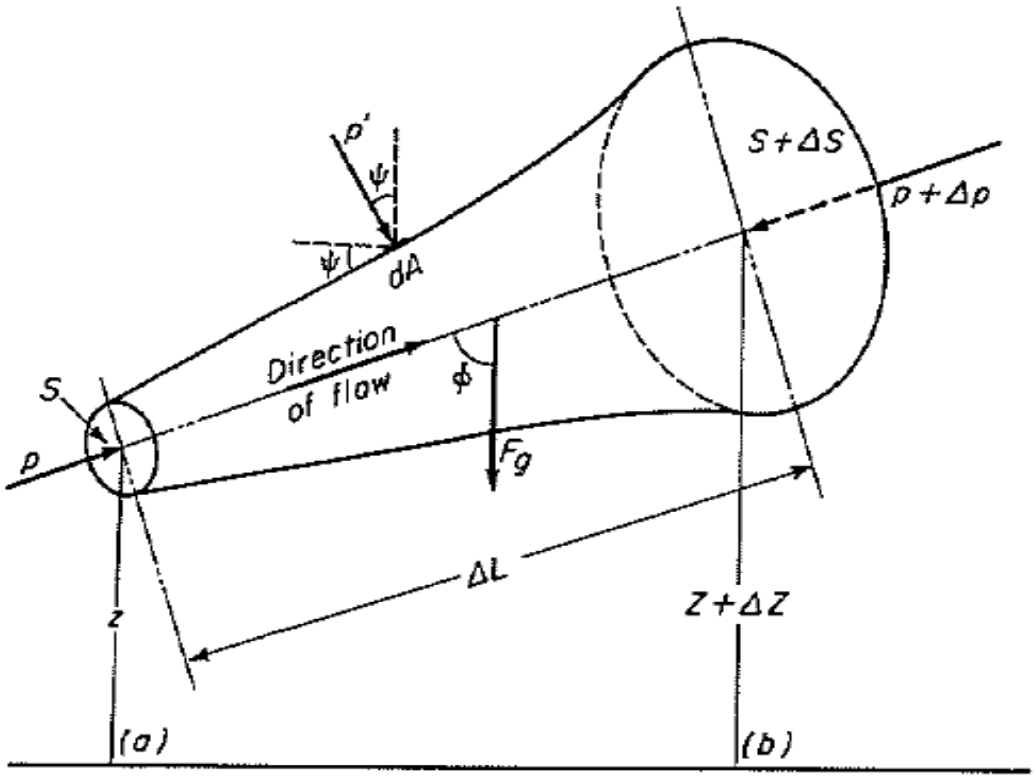

$$\sum F = \frac{\dot{m}\,\Delta u}{g_c}$$

$$\boldsymbol{p_a S_a = pS}$$

$$\boldsymbol{F_g = \frac{g}{g_c}\bar{S}\rho\Delta L}\cos\emptyset$$

$$\sum F = p_a S_a - p_b S_b + F_w - F_g$$

$$\boldsymbol{p_b S_b = (p + \Delta p)(S + \Delta S)}$$

$$\boldsymbol{F_w = \int_0^{\Delta S} \acute{p}\, dS = \bar{\acute{p}}\Delta S}$$

$\cos\phi = \Delta Z / \Delta L$

$$F_g = \frac{g}{g_c} \bar{S} \rho \Delta Z$$

By substituting

$$\frac{\dot{m}}{g_c} \Delta u = \Delta S(\bar{p}' - p) - S\,\Delta p - \Delta p\,\Delta S - \frac{g}{g_c} \bar{S} \rho\,\Delta Z$$

Dividing by $\rho\, S \Delta L$

$$\frac{\dot{m}}{g_c \rho S} \frac{\Delta u}{\Delta L} = \frac{\bar{p}' - p}{\rho S} \frac{\Delta S}{\Delta L} - \frac{1}{\rho} \frac{\Delta p}{\Delta L} + \frac{\Delta S}{\rho S} \frac{\Delta p}{\Delta L} - \frac{g}{g_c} \frac{\bar{S}}{S} \frac{\Delta Z}{\Delta L}$$

Applying limits

$$\frac{\dot{m}}{g_c \rho S}\frac{du}{dL} = -\frac{1}{\rho}\frac{dp}{dL} - \frac{g}{g_c}\frac{dZ}{dL}$$

By substituting

$$\dot{m} = u\rho S$$

$$\frac{u\rho S}{g_c \rho S}\frac{du}{dL} = -\frac{1}{\rho}\frac{dp}{dL} - \frac{g}{g_c}\frac{dZ}{dL} = 0$$

$$\frac{1}{\rho}\frac{dp}{dL} + \frac{g}{g_c}\frac{dZ}{dL} + \frac{d(u^2/2)}{g_c dL} = 0$$

$$\frac{dp}{\rho} + \frac{g}{g_c} dZ + \frac{1}{g_c} d\left(\frac{u^2}{2}\right) = 0$$

$$\frac{p_a}{\rho} + \frac{gZ_a}{g_c} + \frac{u_a^2}{2g_c} = \frac{p_b}{\rho} + \frac{gZ_b}{g_c} + \frac{u_b^2}{2g_c}$$

Mechanical Energy Equation

- **Bernoulli equation - special form of mechanical energy balance**
- **All the terms in this equation are scalar and have the dimensions of energy per unit mass**
- **Mechanical potential energy**
- **Mechanical kinetic energy**
- **Mechanical workdone**

Example 4.4

Example 4.2. Brine, specific gravity 60°F/60°F = 1.15, is draining from the bottom of a large open tank through a 50-mm pipe. The drainpipe ends at a point 5 m below the surface of the brine in the tank. Considering a streamline starting at the surface of the brine in the tank and passing through the center of the drain line to the point of discharge and assuming that friction along the streamline is negligible, calculate the velocity of flow along the streamline at the point of discharge from the pipe.

Bernoulli Equation: Correction for Effects of Solid Boundaries

- **Correction of the *kinetic-energy term* for the variation of local velocity u with position in the boundary layer.**

- **Correction of the equation for the existence of *fluid friction*, which appears whenever a boundary layer forms.**

Kinetic Energy of Stream

$$d\dot{E}_k = (\rho u \, dS)\frac{u^2}{2g_c} = \frac{\rho u^3 \, dS}{2g_c}$$

$$\dot{E}_k = \frac{\rho}{2g_c}\int_S u^3 \, dS$$

$$\frac{\dot{E}_k}{\dot{m}} = \frac{(1/2g_c)\int_S u^3 \, dS}{\int_S u \, dS} = \frac{(1/2g_c)\int_S u^3 \, dS}{\bar{V}S}$$

Kinetic Energy Correction Factor

$$\frac{\alpha \bar{V}^2}{2g_c} = \frac{\dot{E}_k}{\dot{m}} = \frac{\int_S u^3\, dS}{2g_c \bar{V} S}$$

$$\alpha = \frac{\int_S u^3\, dS}{\bar{V}^3 S}$$

If α is known, the average velocity can be used to calculate the kinetic energy from the average velocity by using $\alpha\bar{V}^2/2g_c$ in place of $u^2/2g_c$. To calculate the

$$\frac{p_a}{\rho} + \frac{gZ_a}{g_c} + \frac{\alpha_a \bar{V}_a^2}{2g_c} = \frac{p_b}{\rho} + \frac{gZ_b}{g_c} + \frac{\alpha_b \bar{V}_b^2}{2g_c}$$

Correction of Bernoulli Equation for Fluid Friction

- **Fluid friction can be defined as any conversion of mechanical energy into heat in a flowing stream.**
- **In frictional flow the quantity** $\frac{p}{\rho} + \frac{u^2}{2g_c} + \frac{g}{g_c} Z$ **is not constant along a streamline but always decreases in the direction of flow**

Correction of Bernoulli Equation for Fluid Friction

- **The term h_f represents all the friction generated per unit mass of fluid**
- **The unit of h_f is energy per unit mass**
- **Different from other terms in two ways**
  - **Not at specific location but at all points**
  - **Not inter-convertable**
- **h_f includes both skin friction and form friction**

Skin Friction

- **Friction generated in unseparated boundary layers is called skin friction.**

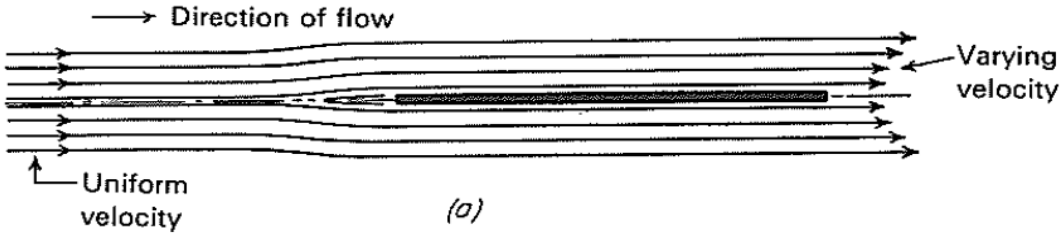

- **Friction appears in boundary layers because the work done by shear forces in maintaining the velocity gradients in both laminar and turbulent flow is eventually converted into heat by viscous action.**

Form Friction

- **When boundary layers separate and form wakes, additional energy dissipation appears within the wake, the friction of this type is called form friction.**

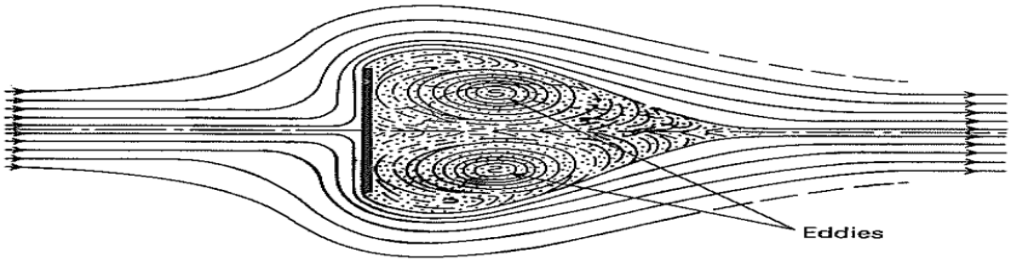

- **Form friction is a function of the position and shape of the solid.**

Problem 4.5

Example 4.3. Water with a density of 998 kg/m^3 (62.3 lb/ft^3) enters a 50-mm (1.969-in.) pipe fitting horizontally, as shown in Fig. 4.5, at a steady velocity of 1.0 m/s (3.28 ft/s) and a gauge pressure of 100 kN/m^2 (2088.5 lb$_f$/ft^2). It leaves the fitting horizontally, at the same elevation, at an angle of 45° with the entrance direction. The diameter at the outlet is 20 mm (0.787 in.). Assuming the fluid density is constant, the kinetic-energy and momentum correction factors at both entrance and exit are unity, and the friction loss in the fitting is negligible, calculate (*a*) the gauge pressure at the exit of the fitting and (*b*) the forces in the x and y directions exerted by the fitting on the fluid.

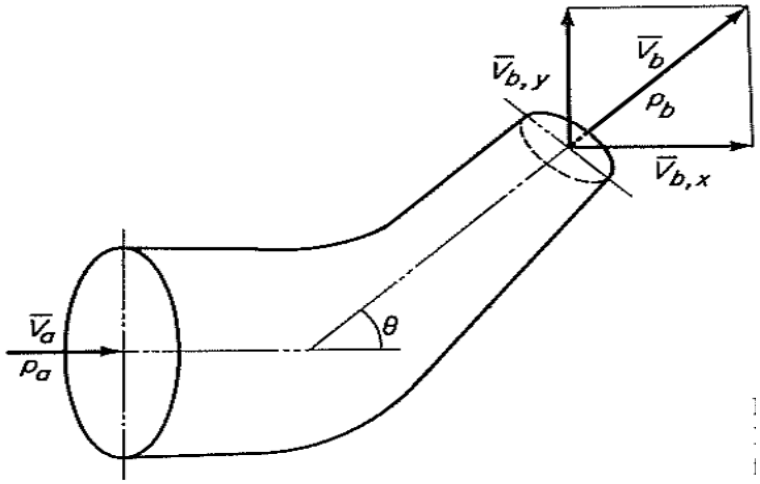

Pump Work in Bernoulli Equation

- **A pump is used in a flow system to increase the mechanical energy of the flowing fluid, the increase being used to:**
  - **maintain flow,**
  - **provide kinetic energy,**
  - **offset friction losses and**
  - **sometimes increase the potential energy**

$$W_p - h_{fp} \equiv \eta W_p$$

$$\eta = \frac{W_p - h_{fp}}{W_p}$$

Pump Work in Bernoulli Equation

$$\frac{p_a}{\rho} + \frac{gZ_a}{g_c} + \frac{\alpha_a \bar{V}_a^2}{2g_c} + \eta W_p = \frac{p_b}{\rho} + \frac{gZ_b}{g_c} + \frac{\alpha_b \bar{V}_b^2}{2g_c} + h_f$$

Example 4.6

Example 4.4. In the equipment shown in Fig 4.6, a pump draws a solution of specific gravity 1.84 from a storage tank through a 3-in. (75-mm) Schedule 40 steel pipe. The efficiency of the pump is 60 percent. The velocity in the suction line is 3 ft/s (0.914 m/s). The pump discharges through a 2-in. (50-mm) Schedule 40 pipe to an overhead tank. The end of the discharge pipe is 50 ft (15.2 m) above the level of the solution in the feed tank. Friction losses in the entire piping system are 10 ft-lb_f/lb (29.9 J/kg). What pressure must the pump develop? What is the power of the pump?